Roof bar kit Transporter T6 15- H1, 4 bars

RR580145000

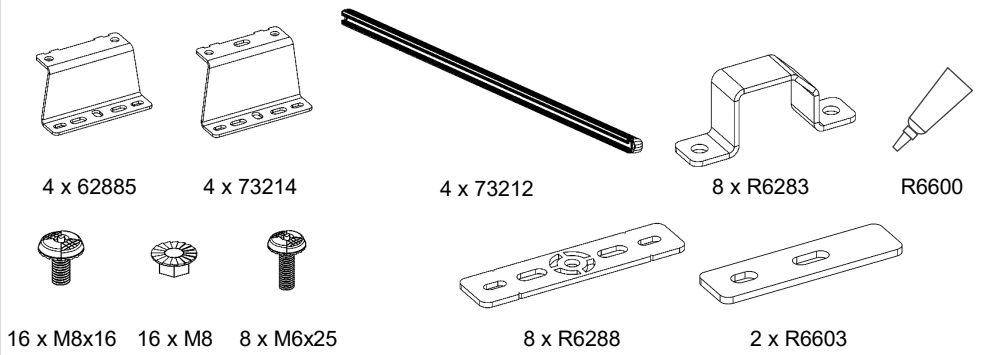

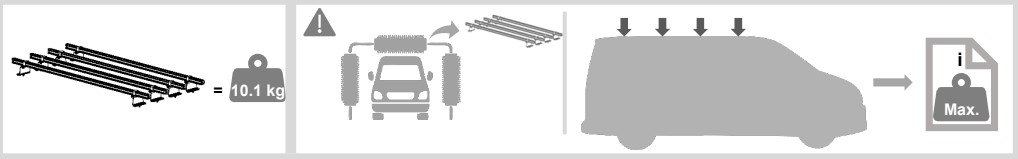

1

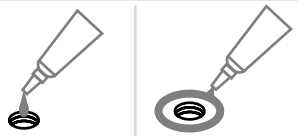

a

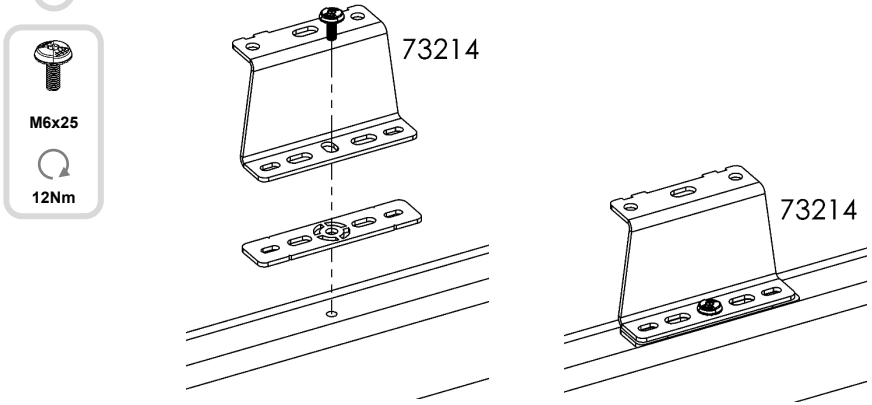

b

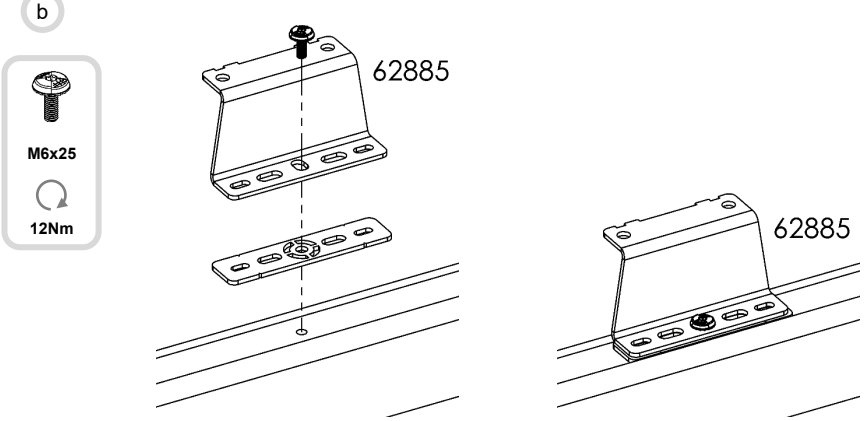

c

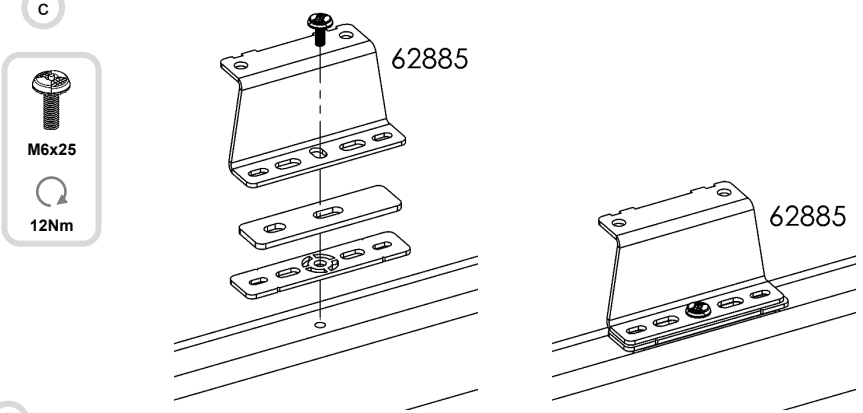
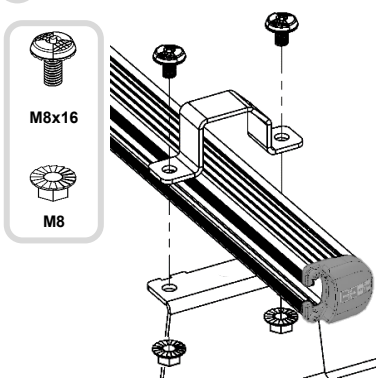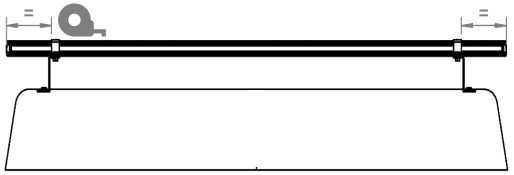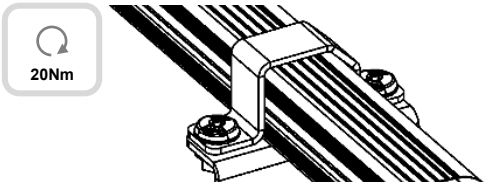
2